Cambridge International AS & A Level

Cambridge International Examinations
Cambridge International Advanced Subsidiary and Advanced Level

CANDIDATE NAME

CENTRE NUMBER

CANDIDATE NUMBER

6200924774

PHYSICS **9702/32**

Paper 3 Advanced Practical Skills 2 **May/June 2014**

2 hours

Candidates answer on the Question Paper.

Additional Materials: As listed in the Confidential Instructions.

READ THESE INSTRUCTIONS FIRST

Write your Centre number, candidate number and name on all the work you hand in.
Write in dark blue or black pen.
You may use an HB pencil for any diagrams or graphs.
Do not use staples, paper clips, glue or correction fluid.
DO **NOT** WRITE IN ANY BARCODES.

Answer **both** questions.
You will be allowed to work with the apparatus for a maximum of one hour for each question.
You are expected to record all your observations as soon as these observations are made, and to plan the presentation of the records so that it is not necessary to make a fair copy of them.
You are reminded of the need for good English and clear presentation in your answers.

Electronic calculators may be used.
You may lose marks if you do not show your working or if you do not use appropriate units.

Additional answer paper and graph paper should be used only if it becomes necessary to do so.

At the end of the examination, fasten all your work securely together.
The number of marks is given in brackets [ ] at the end of each question or part question.

For Examiner's Use	
1	
2	
Total	

This document consists of **12** printed pages.

© UCLES 2014

CAMBRIDGE International Examinations

You may not need to use all of the materials provided.

1 In this experiment, you will investigate the equilibrium of a rod supported by a spring.

(a) The apparatus has been assembled for you as shown in Fig. 1.1.

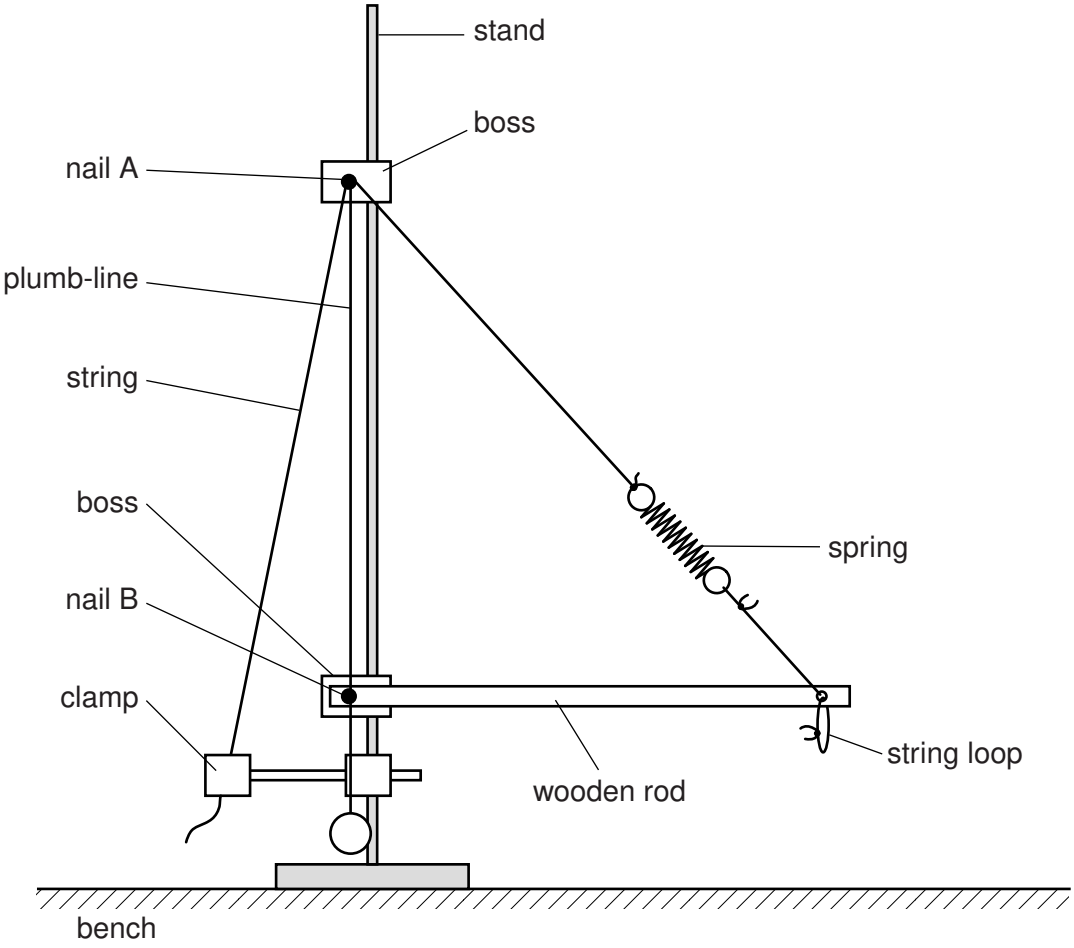

Fig. 1.1

(i) Lift the end of the rod attached to the spring so that there is no tension in the spring. Measure and record the unstretched length l_0 of the spring, as shown in Fig. 1.2.

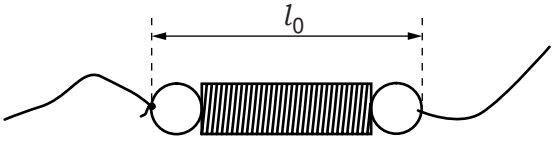

Fig. 1.2

l_0 = ... cm [1]

(ii) Release the end of the rod. Suspend the mass M from the string loop.

(b) (i) Move the string in the clamp to make the rod horizontal.

(ii) Use the plumb-line to ensure that nail B is vertically below nail A, as shown in Fig. 1.3.

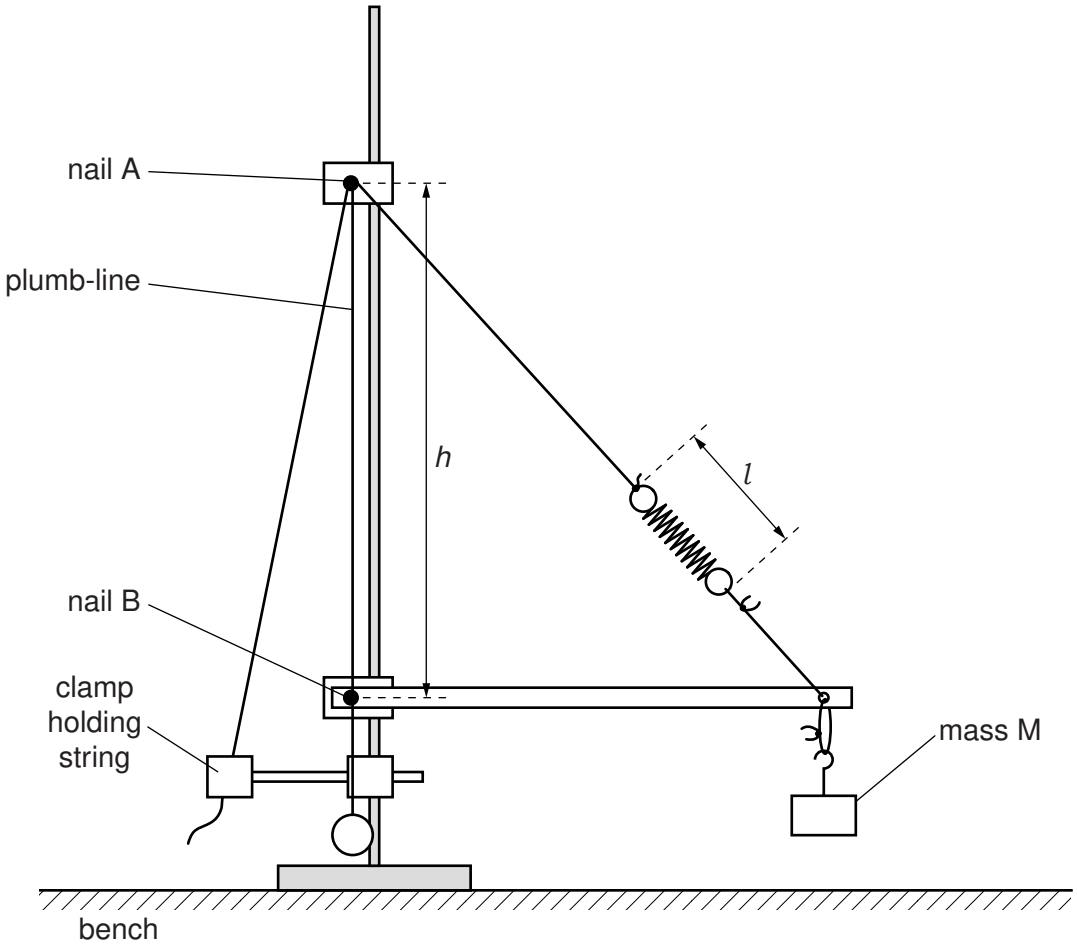

Fig. 1.3

(iii) Measure and record the distance h between the two nails, and the length l of the spring, as shown in Fig. 1.3.

h = ... cm

l = ... cm
[1]

(c) Raise nail B and repeat **(b)** until you have six sets of values of h and l.

Include values for $\frac{1}{h^2}$ and $(l - l_0)^2$ in your table.

[10]

(d) **(i)** Plot a graph of $(l - l_0)^2$ on the y-axis against $\frac{1}{h^2}$ on the x-axis. [3]

(ii) Draw the straight line of best fit. [1]

(iii) Determine the gradient and y-intercept of this line.

gradient = ...

y-intercept = ...

[2]

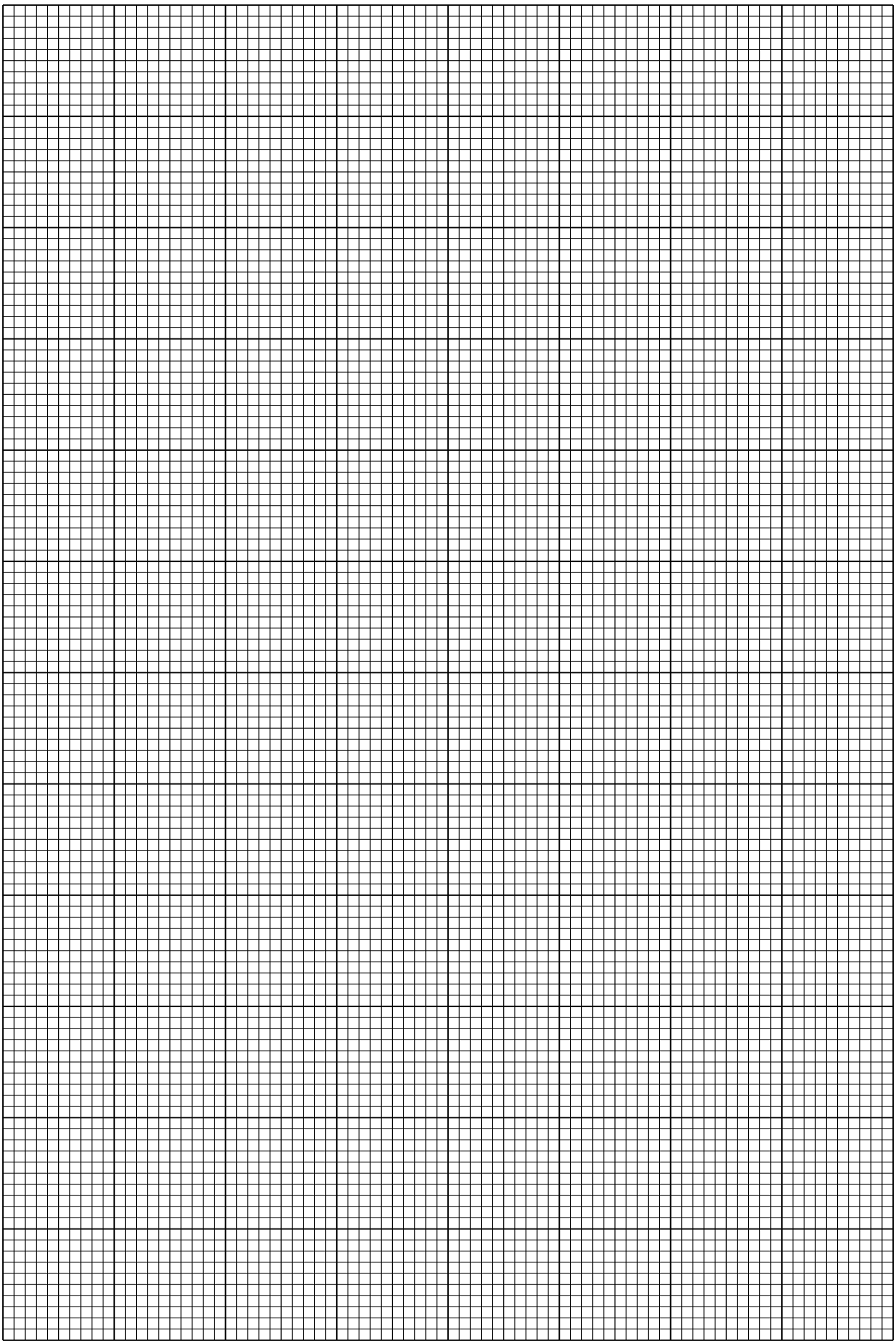

(e) The quantities l and h are related by the equation

$$(l - l_0)^2 = \frac{p}{h^2} + q$$

where p and q are constants.

Using your answers from **(d)(iii)**, determine the values of p and q.
Give appropriate units.

p = ...

q = ...

[2]

Please turn over for Question 2.

You may not need to use all of the materials provided.

2 In this experiment, you will investigate the motion of a mass and a spring.

(a) You are provided with a spring.

(i) Measure and record the diameter d of the coiled section of the spring as shown in Fig. 2.1. Record the number n of turns in the coiled section.

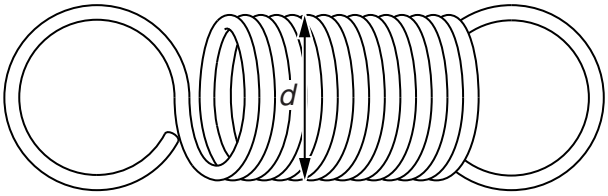

Fig. 2.1

d = ... cm

n = ...
[1]

(ii) Calculate the length l of wire used to make the coiled section of the spring using the relationship $l = \pi nd$.

l = ... cm [1]

(b) **(i)** Set up the apparatus as shown in Fig. 2.2 with mass 1 suspended from the spring and secured with Blu-Tack.

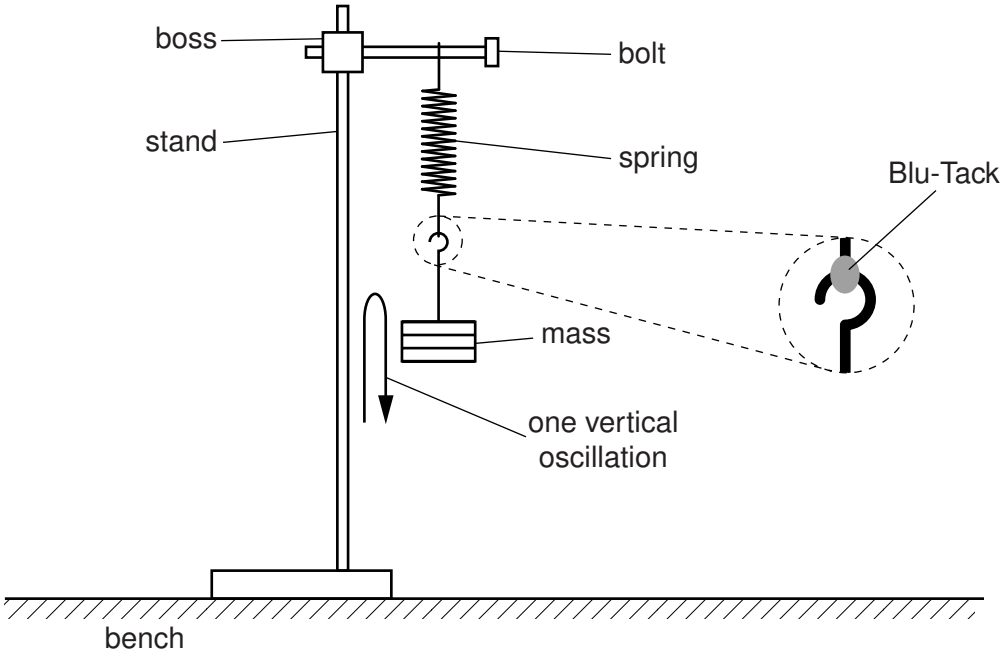

Fig. 2.2

(ii) Pull the mass down approximately 2 cm and release it.
One vertical oscillation is shown in Fig. 2.2. Measure and record the time t for the mass to make 10 vertical oscillations.

t = ...[2]

(c) (i) Lower the bolt until the bottom of the stationary mass is approximately 6 cm above the bench, as shown in Fig. 2.3.

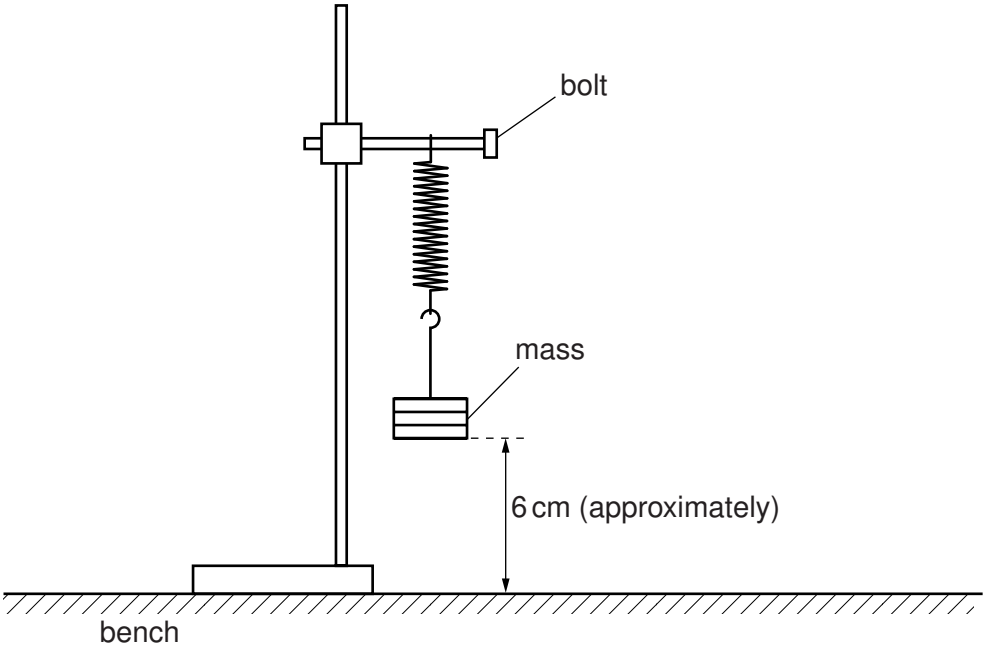

Fig. 2.3

(ii) Pull the mass down until it touches the bench.
Release the mass and watch the loop on the bolt, looking to see if the loop rises above the bolt producing a gap as shown in Fig. 2.4.

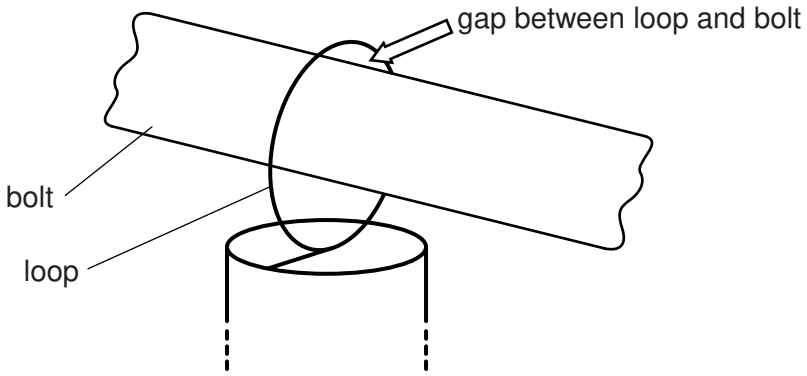

Fig. 2.4

(iii) Keep raising the bolt and repeating **(ii)** until the loop just rises above the bolt at the top of the first oscillation.
With the mass stationary, measure and record the distance A from the bottom of the mass to the bench.

A = ...[1]

(d) Estimate the percentage uncertainty in your value of A.

percentage uncertainty = ...[1]

(e) Detach the mass from the spring. Repeat **(b)** and **(c)** using mass 2.

t = ...

A = ...
[2]

(f) It is suggested that the relationship between A, t and l is

$$A = kt^2l$$

where k is a constant.

(i) Using your data, calculate two values of k.

first value of k = ...

second value of k = ...
[2]

(ii) Justify the number of significant figures that you have given for your values of *k*.

.....

.....

.....

.....[1]

(iii) Explain whether your results in **(f)(i)** support the suggested relationship.

.....

.....

.....[1]

(g) (i) Describe four sources of uncertainty or limitations of the procedure for this experiment.

1. .....

.....

2. .....

.....

3. .....

.....

4. .....

..... [4]

(ii) Describe four improvements that could be made to this experiment. You may suggest the use of other apparatus or different procedures.

1. .....

.....

2. .....

.....

3. .....

.....

4. .....

..... [4]

Permission to reproduce items where third-party owned material protected by copyright is included has been sought and cleared where possible. Every reasonable effort has been made by the publisher (UCLES) to trace copyright holders, but if any items requiring clearance have unwittingly been included, the publisher will be pleased to make amends at the earliest possible opportunity.

Cambridge International Examinations is part of the Cambridge Assessment Group. Cambridge Assessment is the brand name of University of Cambridge Local Examinations Syndicate (UCLES), which is itself a department of the University of Cambridge.